SYSTEM FLOOR

Drumarkon BV, in close consultation with Promat and Silent Line, developed and produce the all new Drumarkon System Floor (D.S.F.). The Drumarkon System Floor contains the following parts:

- Longitudinal bar,
- Transverse bar,
- Height adjustable feet,
- Connections.

The Drumarkon system floor, as a floor gridwork of 600 x 600 mm or 300 x 600 mm, produced in steel or aluminium is the base for a floating floor concept. The floor gridwork has been modelled using FEA software to ensure that the gridwork is stiff enough (under various load conditions) not to create any vibration issues. See the results for both aluminium and steel below:

THE CONCEPT OF A FLOATING FLOOR SYSTEM

The Drumarkon System Floor (D.S.F.) as shown above is used as a base for a floating floor concept in accommodation areas onboard luxury Yachts or commercial vessels.

Drumarkon, in close consultation with Silent Line Group will design the floor concept based on the accommodation layout provided by the client. The standard concept is based on a 600 x 600 mm floor gridwork however this can easily be changed in a 600 x 300 mm floor gridwork. The height is adjustable using various support feet as shown in this presentation.

Ones the design is done we will investigate the most important disturbing frequencies emitted by propulsion propellers and main or secondary diesel engines. Drumarkon can provide various elastomer products such as IMO approved BISCO, SYLOMER or REGUFOAM.

Pending on the excitation frequencies and the static and dynamic load on the floor the correct elastomer is selected and the deflection along with the natural frequencies of the floating floor is presented to the client.

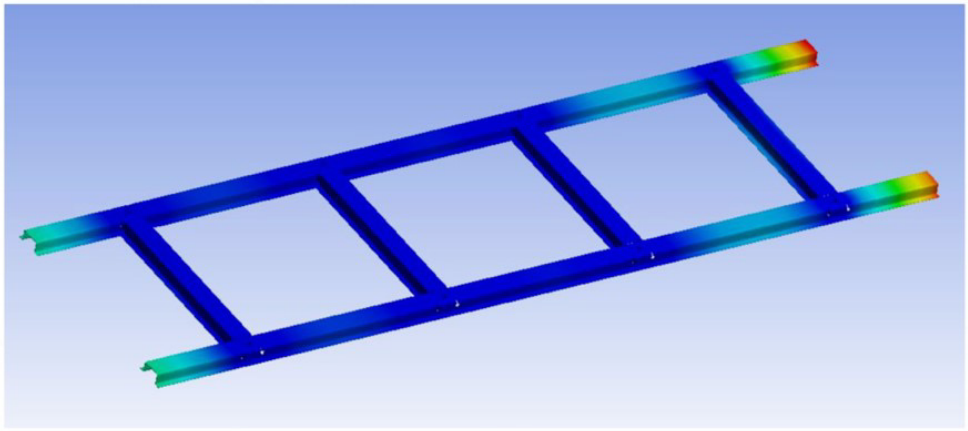

Aluminium first mode shape at 257 Hz

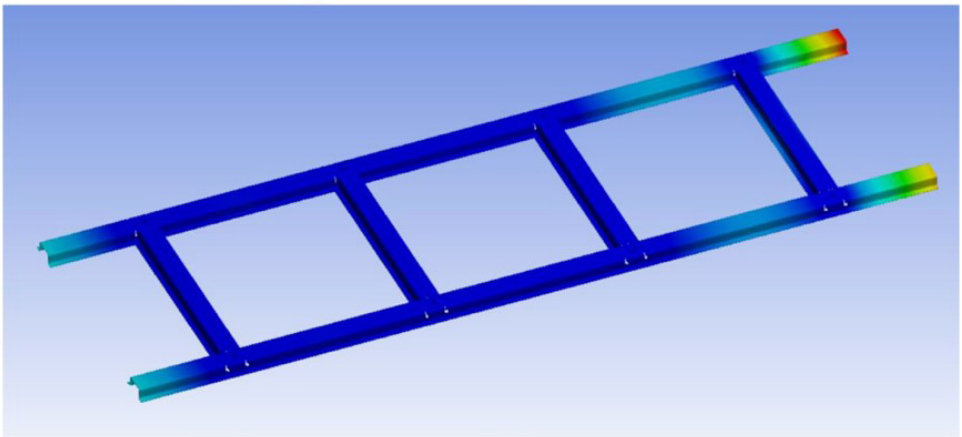

Stainless Steel first mode shape at 270 Hz

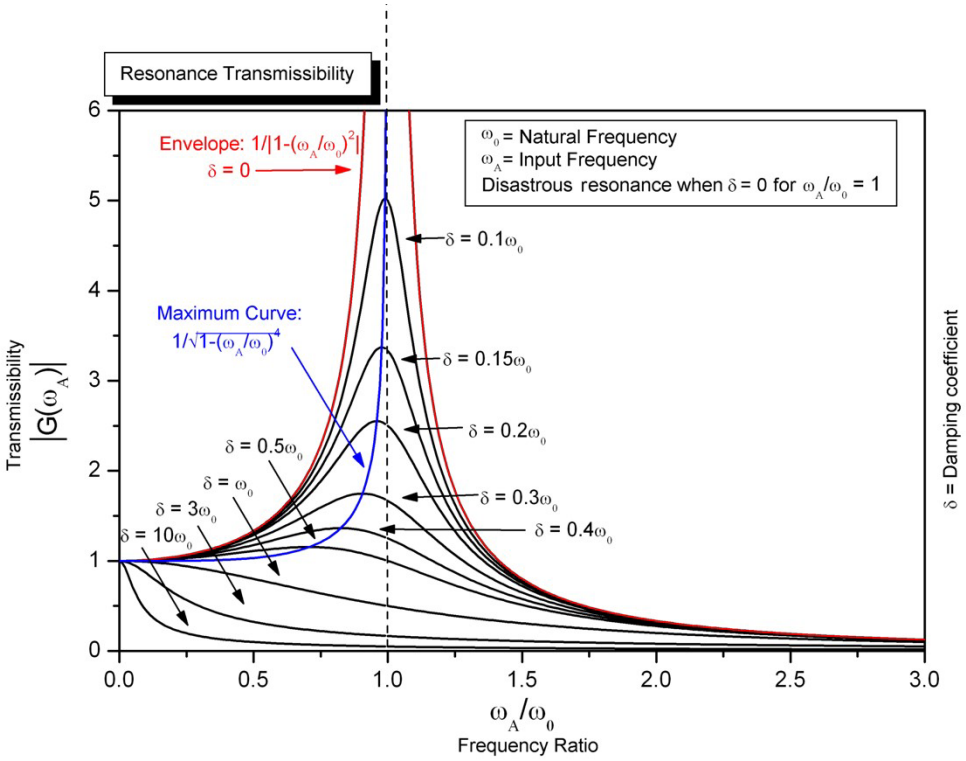

Drumarkon is offering either sound reducing flooring (DrumAcoustic) in various thicknesses and core densities, or IMO approved non combustible fire resistant flooring NC/SR flooring or NC flooring.

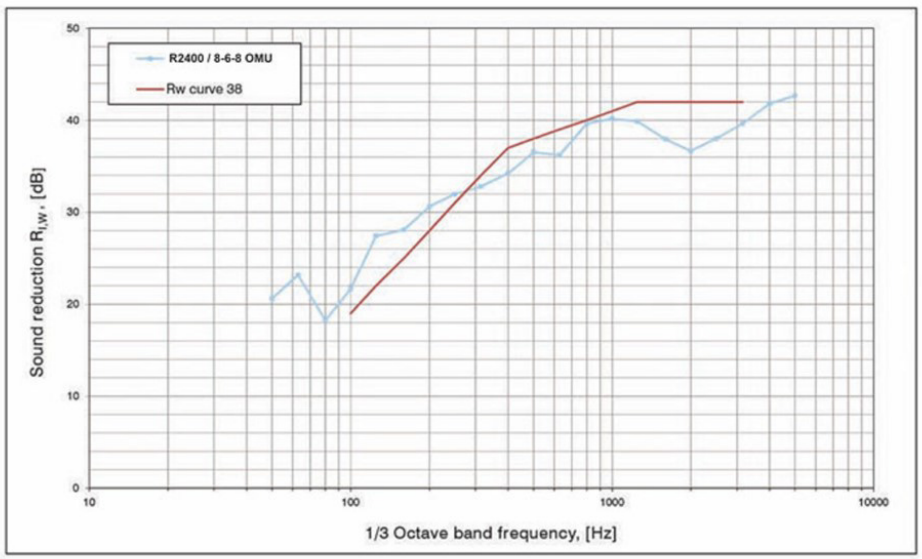

Frequency, f [Hz]	1/3 Octave Band																			
50	63	80	100	125	160	200	250	315	400	500	630	800	1000	1250	1600	2000	2500	3150	4000	5000
20.6	23.2	18.2	21.7	27.4	28.1	30.6	32.0	32.8	34.2	36.5	36.2	39.6	40.2	39.9	37.9	36.7	38.0	39.6	41.8	42.7
Reduction, [dB]																				

Drum Acoustic 2150 (composition 8-6-8 mm)

SYSTEM FLOOR
GALLERY

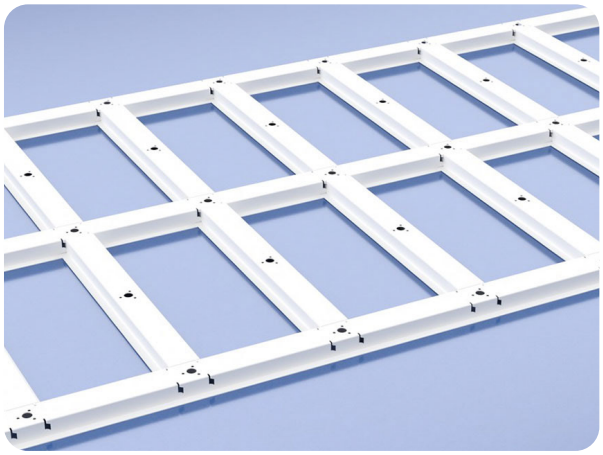

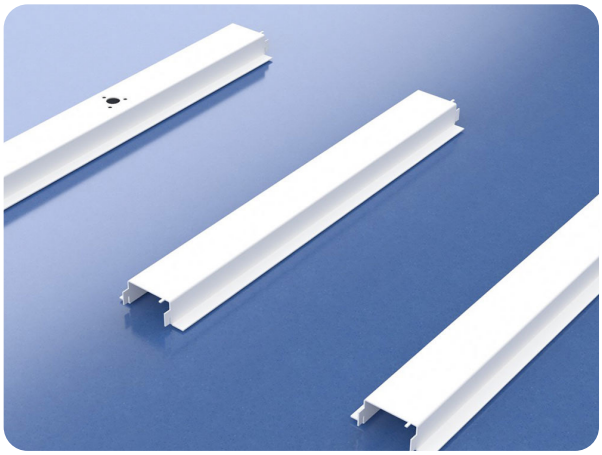

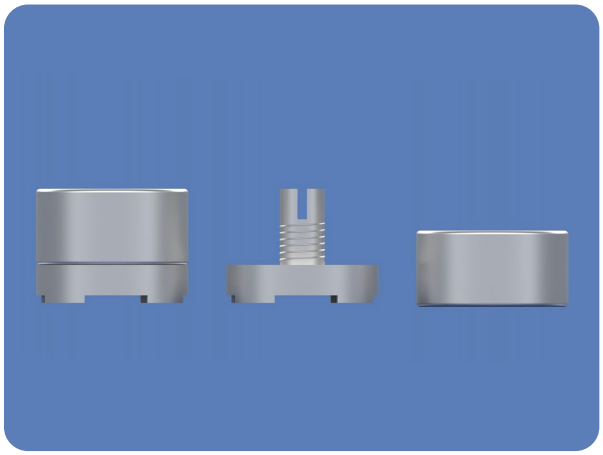

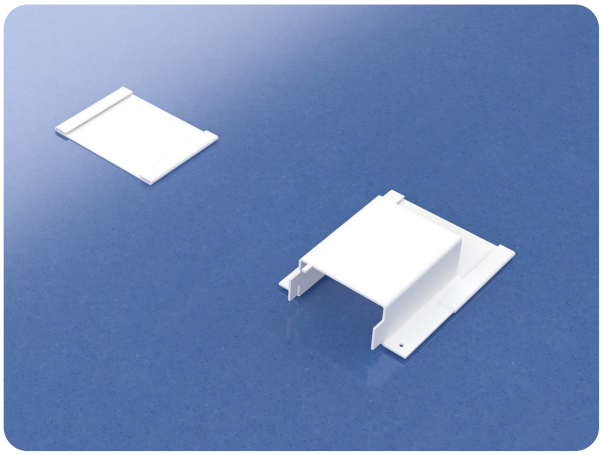

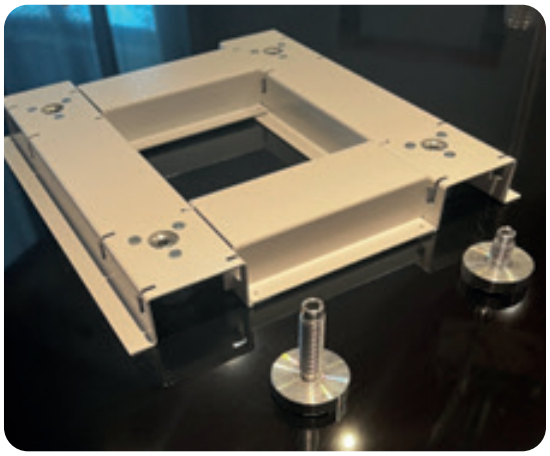

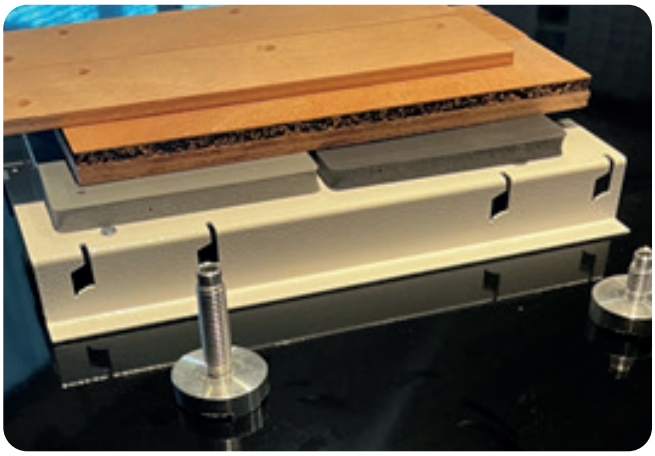

Floor gridwork with height adjustable feet

Floor gridwork with:

- Class B15 NCR/SR flooring
- DA 2150-sound reducing panel
- DA 550-sound reducing panel

▪ **Floor gridwork deflection under load:**

ALUMINIUM GRID WORK : approx. 2.8 kg/m2

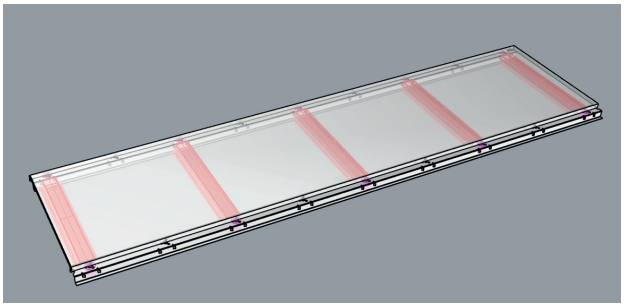

2 x Longitidunal Profile

5 x Transverse Profile

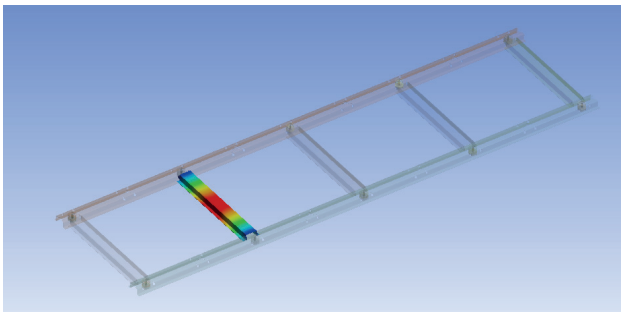

Transverse Profile			
No	Newton(N)	Kg	Total Deformation
1	1000	101,978	0,03 mm
2	2000	203,957	0,06 mm
3	3000	305,935	0,09 mm
4	4000	407,914	0,11 mm
5	5000	509,892	0,14 mm

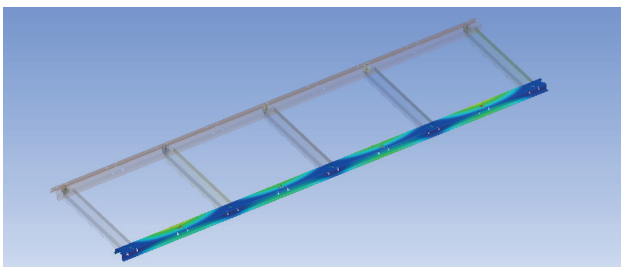

Longitidunal Profile			
No	Newton(N)	Kg	Total Deformation
1	1000	101,978	0,02 mm
2	2000	203,957	0,04 mm
3	3000	305,935	0,05 mm
4	4000	407,914	0,07 mm
5	5000	509,892	0,09 mm

STEEL GRID WORK : approx. 8.0 kg/m2

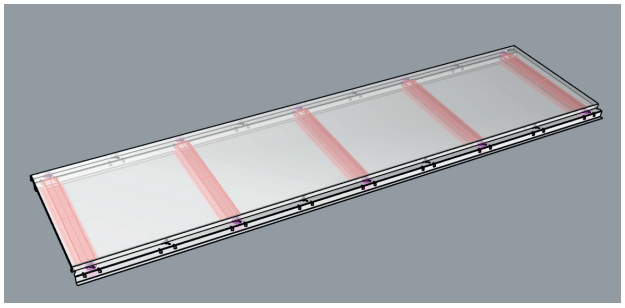

2 x Longitidunal Profile

5 x Transverse Profile

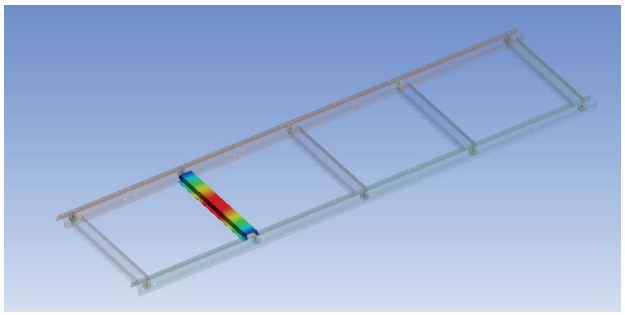

Transverse Profile			
No	Newton(N)	Kg	Total Deformation
1	1000	101,978	0,02 mm
2	2000	203,957	0,03 mm
3	3000	305,935	0,05 mm
4	4000	407,914	0,07 mm
5	5000	509,892	0,08 mm

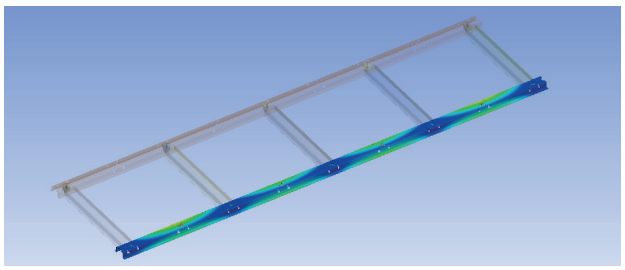

Longitidunal Profile			
No	Newton(N)	Kg	Total Deformation
1	1000	101,978	0,01 mm
2	2000	203,957	0,02 mm
3	3000	305,935	0,03 mm
4	4000	407,914	0,05 mm
5	5000	509,892	0,06 mm